A Combined Front End DC/DC Converter

Yan Xing, Lipei Huang and Xuansan Cai, *Fellow, IEEE*
Dept.of Electrical Engineering
Tsinghua University
Beijing, P.R.China
Email: xingyan@tsinghua.org.cn

Stan Sun
Power Electronics Lab(Beijing)
Lite-On Electronics, Inc.
Beijing, P.R.China
Email: stansun@liteon-pelab.com.cn

***Abstract*--- Holdup time is a special requirement for front end DC/DC converters. It forces the converter to operate in a wide range for input voltage, which greatly degrades the converter's normal efficiency. In this paper a new front end DC/DC converter, a novel combination of an asymmetrical half bridge and a baby-boost with special control, is proposed. The baby-boost stands by under normal conditions and operates inherently only during the hold up time. As a result, the performances of high efficiency, power density and wide range of input voltage are all obtained. Topology and operation principles are presented with simulated and experimental results given in detail.**

Keywords –DC/DC converters; distributed power systems; holdup time; power density; asymmetrical half bridge converters

I. INTRODUCTION

Distributed power system (DPS) is widely applied in computer servers and communication systems offering a standardized modular approach to power processing. The well accepted DPS structure is of the following three stages. A power factor correction (PFC) converter converts the AC line (85Vac~265Vac) to 400Vdc, followed by a front end (FE) DC/DC converter which transforms the 400Vdc to isolated 48Vdc or 12Vdc bus with tight regulation. And load converters deliver the power from the bus to distributed loads. As for the FE DC/DC converter above, the asymmetrical half bridge (AHB) converter provides the optimal combination of simple topology, inherent primary ZVS and low output ripple at the power level up to 1kW[1,2].

For the FE DC/DC converter, holdup time is a special and important requirement. It demands that in case the AC line lost the converter must operate within regulation for at least one AC line cycle to enable the computer to have enough time to save data. In the holdup mode, the FE DC/DC converter is powered by the energy stored in the bulk capacitor of PFC converter discharging normally from 400V (an ordinary voltage) to 300V. As a result the AHB converter is forced to operate in a wide input voltage range and its efficiency at normal input voltage (400V) will be sacrificed a lot [3,4].

Several papers dealt with this problem. For example, [3] proposed a solution based on the concept of changing turns ratio of transformer for different conditions by adding a range winding and a range switch in the secondary side. The improved converter operates with higher turns ratio for high efficiency in normal condition and lower one for very low input voltage during holdup time. However, the range switch may not be controlled easily with little disturbance in output voltage. An optimized AHB topology with asymmetrical turn ratios is presented in [4]. Although normal efficiency and voltage stress on the rectifiers are improved, unbalanced current stress, more uneven power distribution and poorer output current ripple arise at the same time.

To achieve objectives of both high efficiency and wide input voltage range for holdup time, a novel FE DC/DC converter is proposed in this paper. The operation principle and important features of the converter are analyzed and verified with a 600W prototype converter.

II. PROPOSED TOPOLOGY AND OPERATION PRINCIPLE

The proposed FE DC/DC converter is shown in Fig.1. A boost cell consists of Q_1, D_2 and L_1 is introduced preceding the existing AHB topology. The controller for the boost cell is shown in Fig.2. By setting the reference voltage for the boost output (V_{2ref}, 370V) slightly lower than its normal input voltage (V_1, 400V), the proposed FE DC/DC converter has two operation modes: normal and holdup.

A. *Normal operation mode*

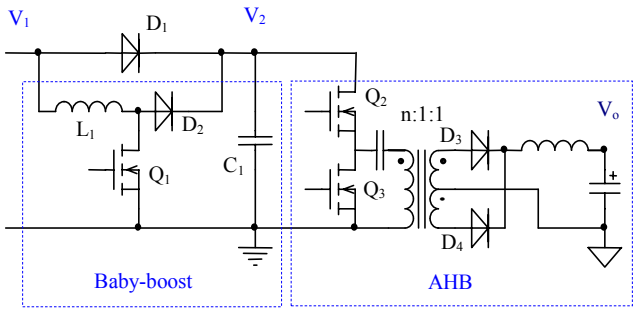

Fig.1 The proposed front end DC/DC converter

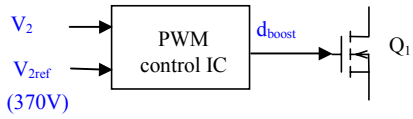

Fig.2 Control for the baby-boost

When the AC line works, the input voltage of the FE DC/DC converter (V_1) is 400V. According to Fig.2, the duty cycle d_{boost} of switch Q_2, keeps in zero inherently for its input voltage (V_1) higher than the reference (V_{2ref}, 370V). Therefore the diode D_1 conducts and the input voltage for the AHB circuit (V_2) is 400V, following V_1. Thus the boost cell just stands by in normal operation mode with little power consumption. The equivalent circuit in the normal operation mode is indicated in Fig.3.

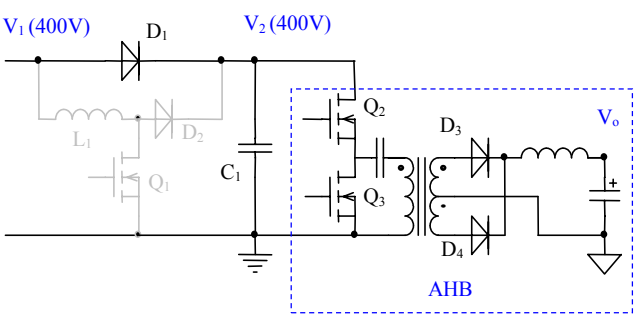

Fig.3 Equivalent circuit in the normal operation mode

B. *Holdup operation mode*

In case the AC line lost, the bulk capacitor of the PFC discharges with its voltage V_1 dropping from 400V. As long as the voltage V_1 drops below V_{2ref} of 370V, the FE DC/DC converter will switch to the holdup mode. When the boost cell operates automatically at a gradually increasing duty cycle from zero to hold its output voltage V_2, the input for the AHB as well, at V_{2ref} until reaching its maximum duty cycle, e.g., 45%, during V_1 dropping from 370V to approximately 200V. The equivalent circuit in the holdup mode is shown in Fig.4.

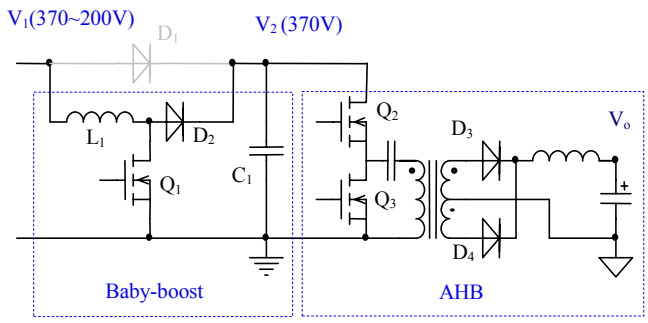

Fig.4 Equivalent circuit in the holdup mode

Analyzing the key operation features of the boost above, the calculated duty cycle and output voltage over the whole input voltage range are illustrated in Fig.5.

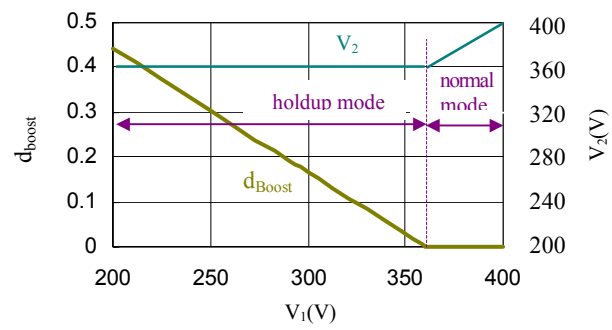

Fig.5 Duty cycle and output voltage of the baby-boost

The smooth switch between the two operation modes brings little crash on the FE DC/DC converter due to the well regulated boost operation.

III. KEY FEATURES OF THE PROPOSED CONVERTER

A. *Performance of the converter in normal operation*

The duty cycle of AHB converter in Fig.1 varies in accordance with its input voltage V_2:

$$2D(1-D)V_2 / n = V_o$$

And the output voltage must be within regulation at the lowest input voltage. Hence we have

$$D(1-D) = D_{max}(1-D_{max})V_{2\min} / V_2$$

The calculated duty cycle vs. input voltage are shown in Fig.6, supposing the D_{max} as 0.5, for both normal AHB converter with input range of 400V~300V and the AHB in Fig.1. Because the input voltage of the AHB circuit in the proposed converter is ensured by the boost cell no less than 370V, in both normal and hold up modes, the normal duty cycle(at the highest voltage 400V) is increased greatly. Therefore performance for the distribution of current in the primary side, the power loss and voltage stress on the rectifiers in the secondary side are improved significantly. As a result, the AHB unit is optimized in normal operating condition and both higher efficiency and power density can be obtained.

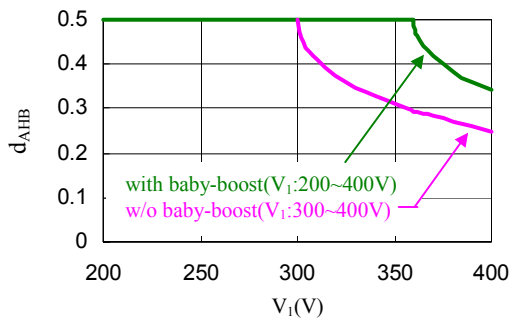

Fig. 6 Duty cycle comparison of AHB with and w/o baby boost

The voltage stresses on the rectifies D_3 and D_4in Fig.1 are :

$$V_{D3} / V_o = 1/(1-D)$$

$$V_{D4} / V_o = 1/D$$

The comparison of the voltage stress on the rectifiers between the proposed converter and normal AHB, for the duty cycle variation shown in Fig.6, is indicated in Fig.7. High efficiency synchronized rectifier (SR) can be realized easily via self driven with the drive voltage ensured within a narrower range.

B. Baby boost

Considering holdup time an accidental short period, the boost unit in proposed converter, which stands by with little power consumption in normal operation mode, can operate at a high switching frequency with a very small sized magnetic core and capacitor without heat sink for the devices. Therefore the Boost cell can be of a baby-size.

As *A* and *B* discussed above, the whole efficiency and power density of the proposed converter can be improved significantly, compared with the existing AHB topology, for FE DC/DC application.

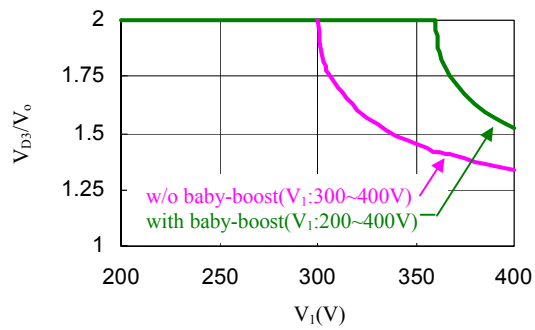

(a)

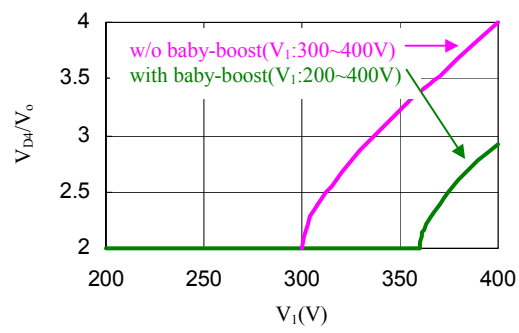

(b)

Fig.7 Comparison of voltage stress on the rectifiers of proposed converter(AHB with baby Boost)and normal AHB(w/o baby-boost) (a) Voltage stress on D_3, (b) Voltage stress on D_4

C. Bulk capacitor and holdup time

The available holdup time mainly depends on the utilizable energy of the bulk capacitor C in the PFC converter discharging from normal voltage V_{1nom} to V_{1min}.

By the proposed converter, Approximately

$$\frac{1}{2}C(V_{1nom}^2 - V_{1min}^2)/(\frac{1}{2}CV_{1nom}^2) =$$

$$\frac{1}{2}C(400^2 - 203^2)/(\frac{1}{2}C400^2) \approx 75\%$$

of the stored energy can be utilized with the capacitor C discharging from 400V to 200V. It is much longer than the existing methods [3,4] because for the latter the percentage is only

$$\frac{1}{2}C(400^2 - 300^2)/(\frac{1}{2}C400^2) \approx 44\%$$

when the capacitor C discharging from 400V to 300V.

Therefore a less bulky capacitor C with lower cost and

smaller size can be used for the same holdup time requirement.

IV. SIMULATED AND EXPERIMENTAL RESULTS

A 600W(12V/50A) distributed power supply is built to verify the approach proposed. The main parameters are as follows:

The normal output voltage of the PFC converter is 400V with the bulk capacitor 440uF.

Magnetic core of L_1: RM6;

Switch in the baby-boost (Q_1): STP12NM50

Switching frequency of the baby-boost: 350kHz

Diode D_1: FEP16FT; D_2: HFA08TB60

C_1=2.2uF

Main switches in the primary side (Q_2 and Q_3): STP20NM50

SR MOSFET in the secondary side (to serve as rectifiers noted as D_3 and D_4 in Fig.1): SUP75N06 (3 in parallel respectively)

Magnetic core of the transformer: PQ3230

Switching frequency of the AHB: 100kHz

The experimental waveforms at full load are shown in Fig.8, Where v_p and i_p are d-s voltage of Q_3 and primary current of the transformer respectively, and v_{su} the secondary upper wing voltage of the transformer.

Fig.9 indicates that the measured holdup time at full load is approximately 28ms while V_2 is held at 375V during V_1 dropping from 400V to 220V (A hysteresis comparator is designed to disable the operation of FE DC/DC converter when PFC converter soft starting and V_1 lower than 220V).

The measured efficiency of the proposed FE DC/DC converter at normal input voltage of 400V is illustrated in Fig.10. The efficiency is as high as 93.7% at full load.

The laboratory prototype of the converter is shown in Fig.11.

Fig.12 shows the simulated property of the example 600W DPS under an AC line sag condition. Where V_{in}, V_1 and V_o are rectified AC line voltage, input and output voltage of the FE DC/DC converter, respectively. i_{L2}, v_{pi} and V_2 denote the current through the inductor L_1, output signal of voltage regulator for the baby-boost and the output voltage of the baby-boost respectively. It is verified in Fig.12 that the switchover between the normal/holdup modes is smooth and reliable, causing little disturbance for control or power signals.

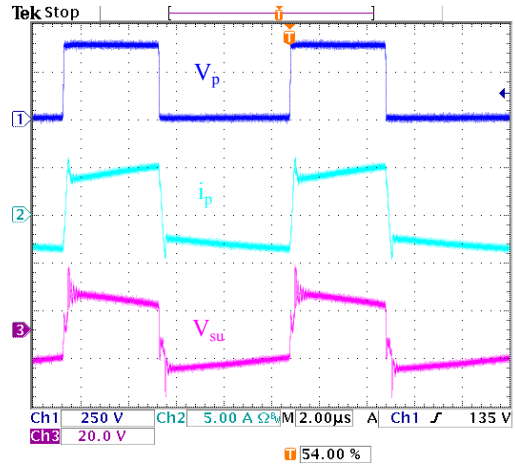

Fig.8 Experimental waveforms in normal mode @full load

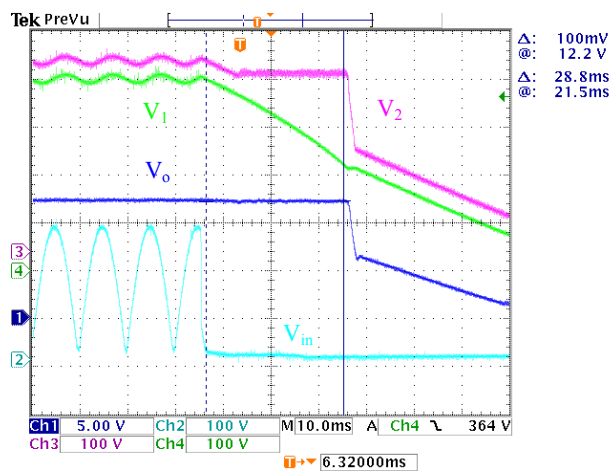

Fig.9 Experimental waveforms @ full load

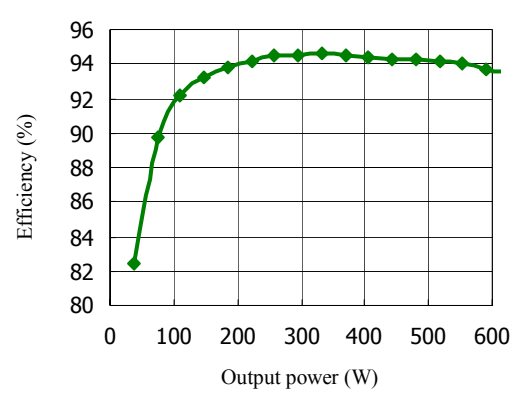

Fig.10 Measured efficiency of the proposed converter

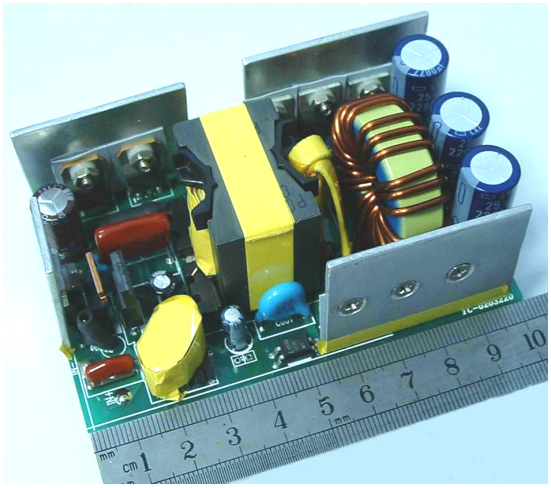

Fig.11 Lab prototype of the 600W front end DC/DC converter

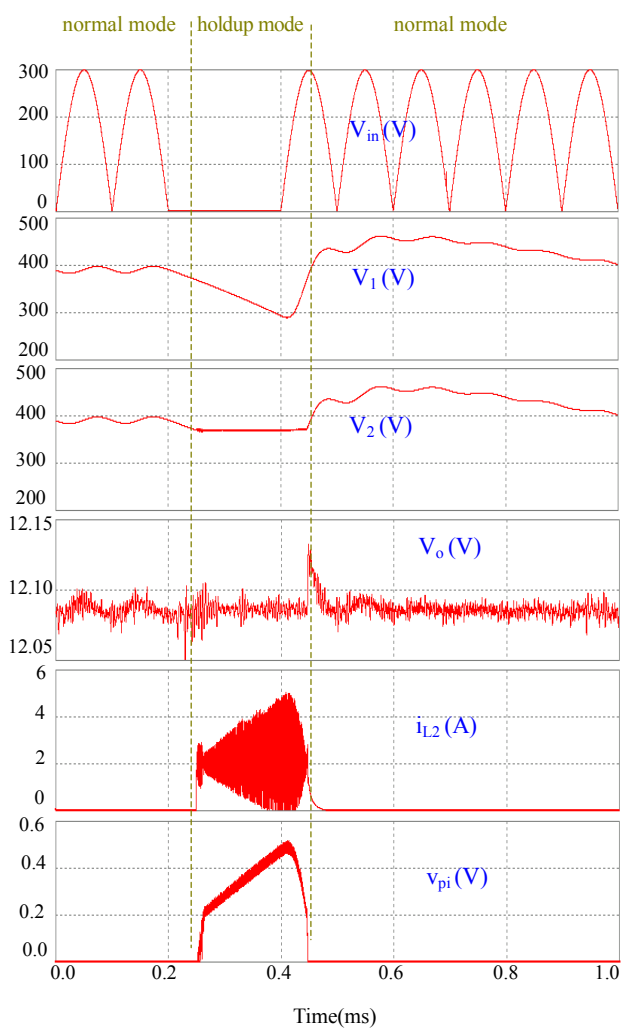

Fig.12 Simulated results under a AC line sag condition

It is also easy to understand through the simulations that the disturbance of any AC sag to the output voltage of the FE DC/DC converter can be eliminated by the fast compensation of the baby-boost.

V. CONCLUSION

The baby-size back up boost combined front end DC/DC converter proposed functions practically and efficiently for holdup time requirement. A 12V/50A FE DC/DC converter, operating at normal efficiency of 93.7% and 28ms holdup time at full load, and with the bulk capacitor of PFC converter 440uF, is implemented with this approach. The solution offers an attractive alternative for a front end DC/C converter with high efficiency, high power density and sufficient holdup time in distributed power systems.

REFERENCES

[1] Fred C.Lee, Peter Barboa,Peng Xu,Jingdong Zhang,Bo Yang and Francisco Canales, Topologies and Design Considerations for Distributed Power System Applications, Proceedings of the IEEE,Vol.89,No.6,June 2001,pp939-950

[2] Sergey Korotkov,Valery Meleshin,Rais Miftahutdinov, Simon Fraidlin, Soft-switched Asymmetrical Half-Bridge DC/DC Converter: Steady-state Analysis of Switching Processes, Telecommunications Energy Special Conference, 1997, pp177-184

[3] Bo Yang,Peng Xu and Fred C.Lee, Range Winding for Wide Input Range Front End DC/DC Converter, IEEE APEC'01, pp476-479

[4] Weiyun Chen,Peng Xu and Fred C.Lee, The Optimization of Asymmetric Half Bridge Converter, APEC'01,pp703-707